RE-CERTIFICATION PROGRAM

Inspection Guidelines for Wheels and Rims

Visual and Magnetic
Particle Inspection Handbook

RIMEX
Building better wheels

CONTENTS OVERVIEW

1.0 INTRODUCTION

2.0 NOMENCLATURE OF A RIM / WHEEL & ASSEMBLY PARTS
- 2.1 Location Description for Defect/Identifications

3.0 GUTTER SECTION
- 3.1 Gutter Description
- 3.2 Gutter Face
- 3.3 Lock Ring / O-Ring Groove
- 3.4 Mounting Surface/Taper (Rim Only), Valve Locator
- 3.5 Gutter Circumference Weld (GCW)
- 3.6 MPI: Gutter Section

4.0 CENTER BAND

5.0 BUTT WELD

6.0 VALVE / DEFUZER HOLE

7.0 DISC SECTION (WHEEL)

8.0 BACK SECTION
- 8.1 Back Circumference Weld
- 8.2 Back Section Taper (BT)
- 8.3 Back Lip Description (MES & TSR)
- 8.4 Back Section Face

9.0 PARTS
- 9.1 Side Ring (Flange)
- 9.2 Bead Seat Band (BB)
- 9.3 Lock Ring (LR)

10.0 REPAIR PROCESS
- 10.1 Flow Chart

11.0 CONCLUSION

Appendix RIMEX INSPECTION GUIDELINE SUMMARY
RIMEX INSPECTION REPORT

1.0 INTRODUCTION

With over 35 years of experience as a world leader in design and manufacturing of earthmoving rims and wheels, Rimex realizes the necessity of proper assessment and evaluation of products in the field. Once in service, earthmoving wheels and rims must be maintained and inspected for maximum safety and service life.

One of the best ways to do this is to conduct non-destructive testing and refurbishment of rim/wheel assemblies. With the implementation of the Australian Standard AS 4457.1, earthmoving wheels and rims have been given a set guideline for inspection and repair. Rimex has identified this Australian Standard as a “best practice” and have implemented the guidelines throughout our Branch Network.

This manual is an attempt to addresses the issues of wear, reusability and inspection.

2.0 NOMENCLATURE OF A RIM ASSEMBLY

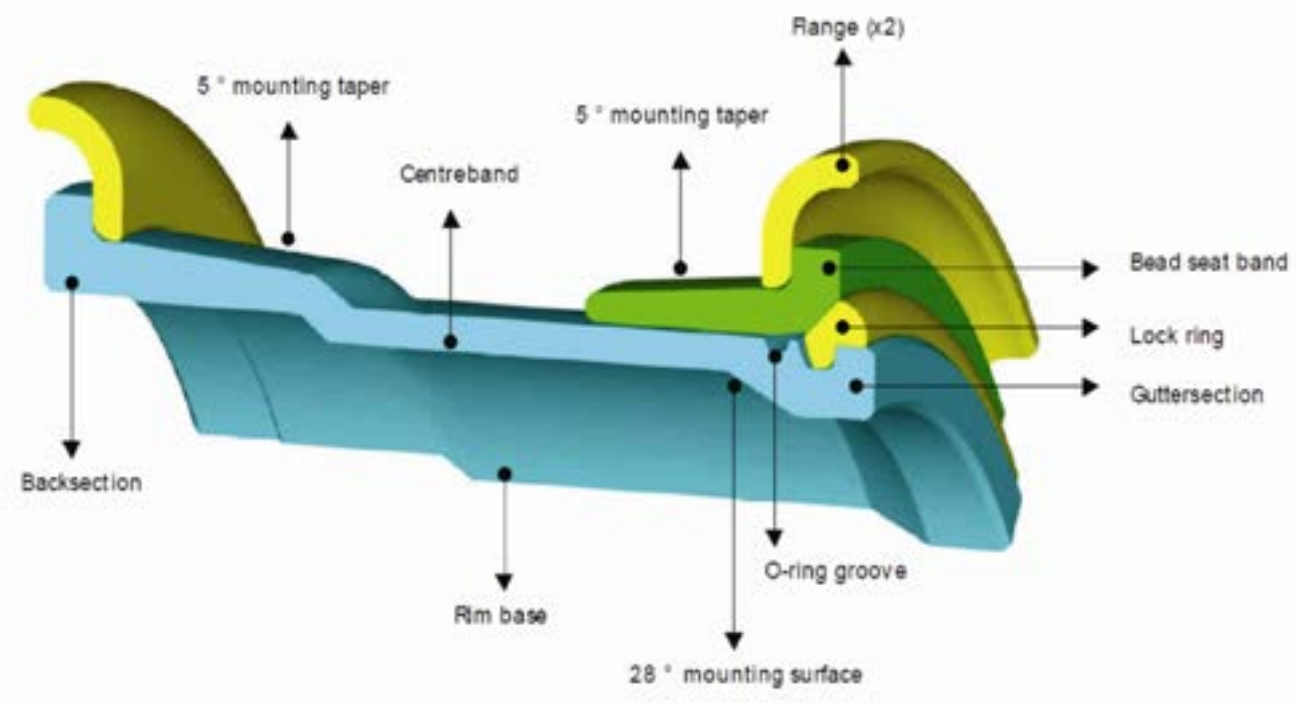

A basic 5 piece rim/wheel assembly consists of a rim/wheel base, two side rings, a bead band and a lock ring. In Rimex’s simple terminology, a rim mounts to the truck by the 28° gutter section taper and independent clamps (E.g. 830E), while a wheel uses a welded in disc (E.g. Cat 789)

2.1 LOCATION DESCRIPTION OF DEFECT/IDENTIFICATION

When reviewing a rim or wheel, the locality of the area of defect needs to be understood in order to be able to describe what section is damaged and how to document its specific location on the rim. To achieve this, the rim needs to be viewed from a certain position.

Start by positioning the rim on its side (center band). Standing in front of the rim, the gutter section must be in the most forward position, making it the first part to be viewed. Finally, the rim must be turned and stopped where the valve holes are at its highest circumference. From this position (picture 2.01), the rim is now viewed as a clock, with the valve holes at twelve o'clock. Each area of the rim can be described by its section and with a designation between one and twelve o'clock. This is done to describe both the outside (OD) and the inside (ID) of a rim.

Example: Gutter Face - Mechanical damage @ 6:00

2.11

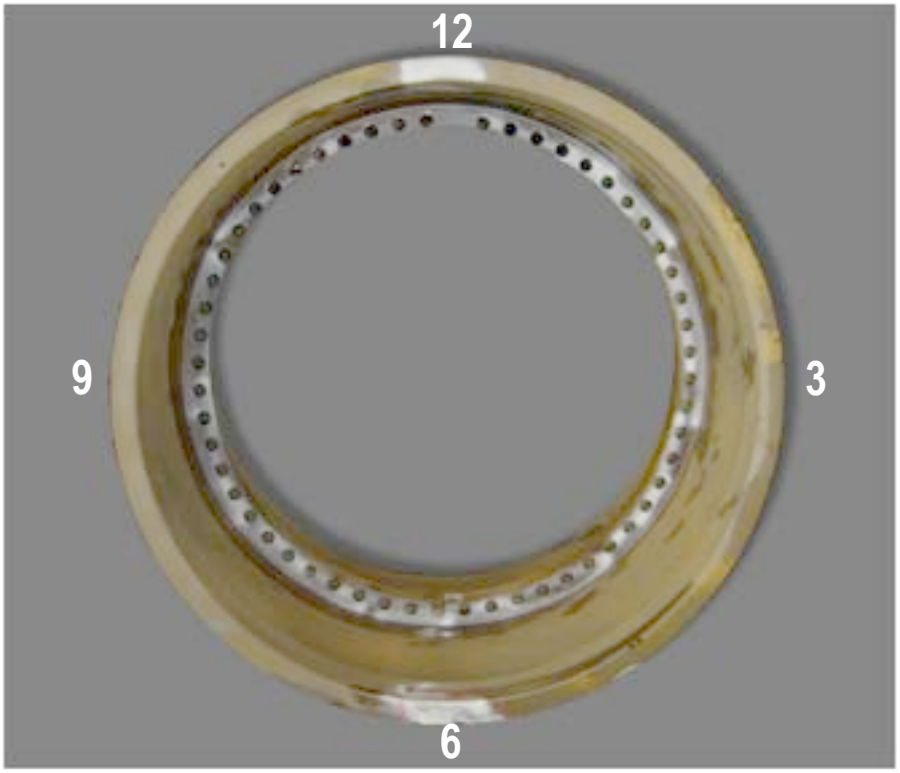

Rimex uses an ID Tag (picture 2.02) to identify all of our earthmoving wheel/rim bases. This tag is stamped with a wide variety of information that helps us in guaranteeing the integrity and traceability of our products. Typically other manufacturers stamp their identification on the gutter section or back section.

2.12

3.0 GUTTER SECTION

Below are the six components of a gutter section. Each area needs to be reviewed:

- Gutter Face
- Lock Ring Groove
- O-ring Groove
- Mounting Taper (MT) - ID of Gutter on a Rim
- Valve Locator
- Gutter Circumference Weld (GCW)

3.1 Gutter Description

3.11 (RIM) GUTTER

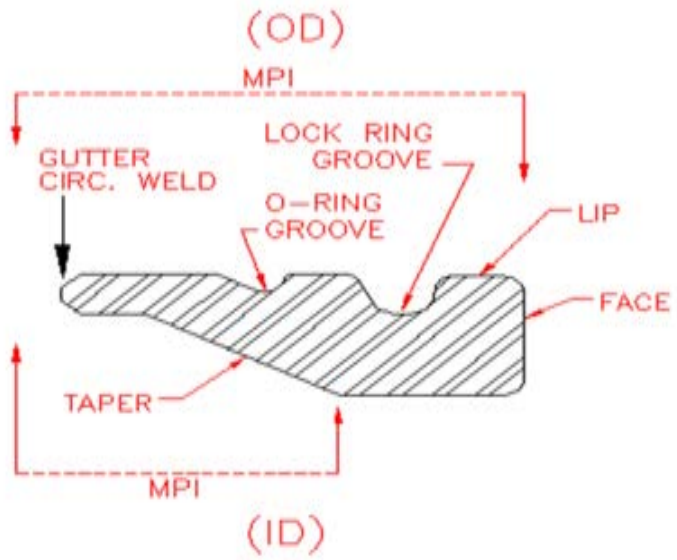

3.2 Gutter Face

Under normal conditions, the face of the gutter will have few signs of wear. If damaged does occur, it will be from mechanical, external impacts or damage from the spacer band (picture 3.21 - see next page). Each incident needs to be assessed individually. Magnetic Particle inspection is recommended at specific sites where the inspector observes an area of concern. If the structural integrity or roundness is ever in question, the gutter section should be replaced.

3.21

3.3 LOCK RING / O-RING GROOVE

The lock ring and o-ring groove should be carefully reviewed 360° around the rim. Any visible indications, mechanical damage, or excessive wear needs to be assessed. The o-ring groove is a very critical area as any mechanical damage or excessive corrosion can cause air loss (picture 3.31).

3.31

The best way to review the condition of the grooves is with a Rimex Gauge (part number 782 000 0025). A rim in excellent condition will show minimal gap between the gauge and the rim. (Picture 3.32) In the picture (3.33), the depth of the area eroded has exceeded 2 mm, resulting in a failure of the section. Excessive mechanical damage, which cannot be smoothed out by grinding or sanding of the surface can also result in a failure of the section. In the case where the integrity of the grooves have been compromised, the gutter section must be replaced. Typically, after years of service under normal operating conditions, a large diameter gutter section (ie.63”) will fail the gauge exam before you will see a crack in the groove.

3.32

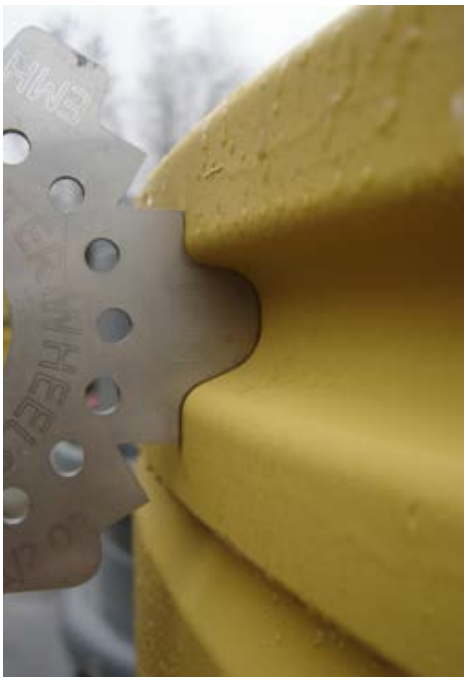

3.33

3.4 MOUNTING TAPER (MT) - RIM ONLY, VALVE LOCATOR

A visual inspection of these areas should indicate no signs of mechanical damage, and or scarring to the gutter ID surface. Usually, damage occurs to this region of the gutter when the rim has not been properly secured, allowing the rim to rotate around the hub. This spinning of the rim can damage the mounting taper (picture 3.42) and/or the valve protector. In extreme cases the valve hardware can also be damaged leaving broken brass in the valve hole (picture 3.41). A mild case of this spinning may only result in a damaged valve locator, which can be replaced. When the mounting taper has been damaged, 95% of the time a new gutter is required.

3.41

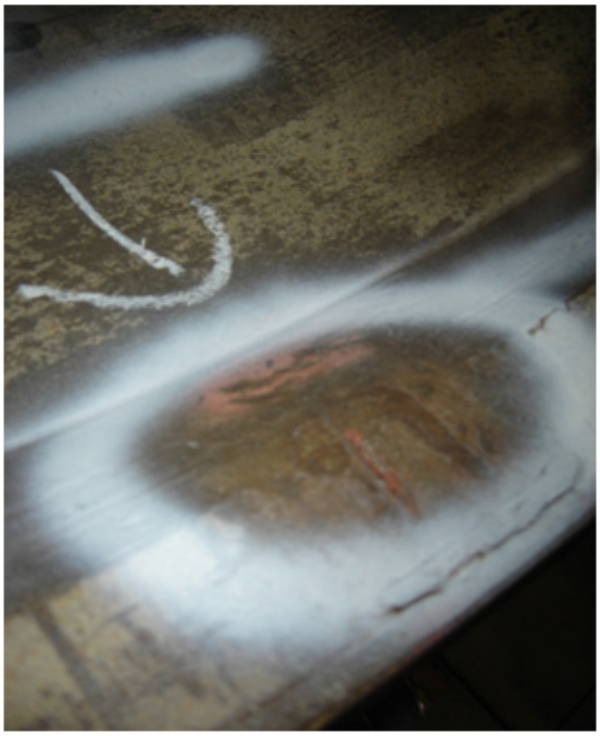

Spun Gutter- Removed Valve Protector

3.42

Spun Gutter - Damage to Taper (Mount Taper)

3.43

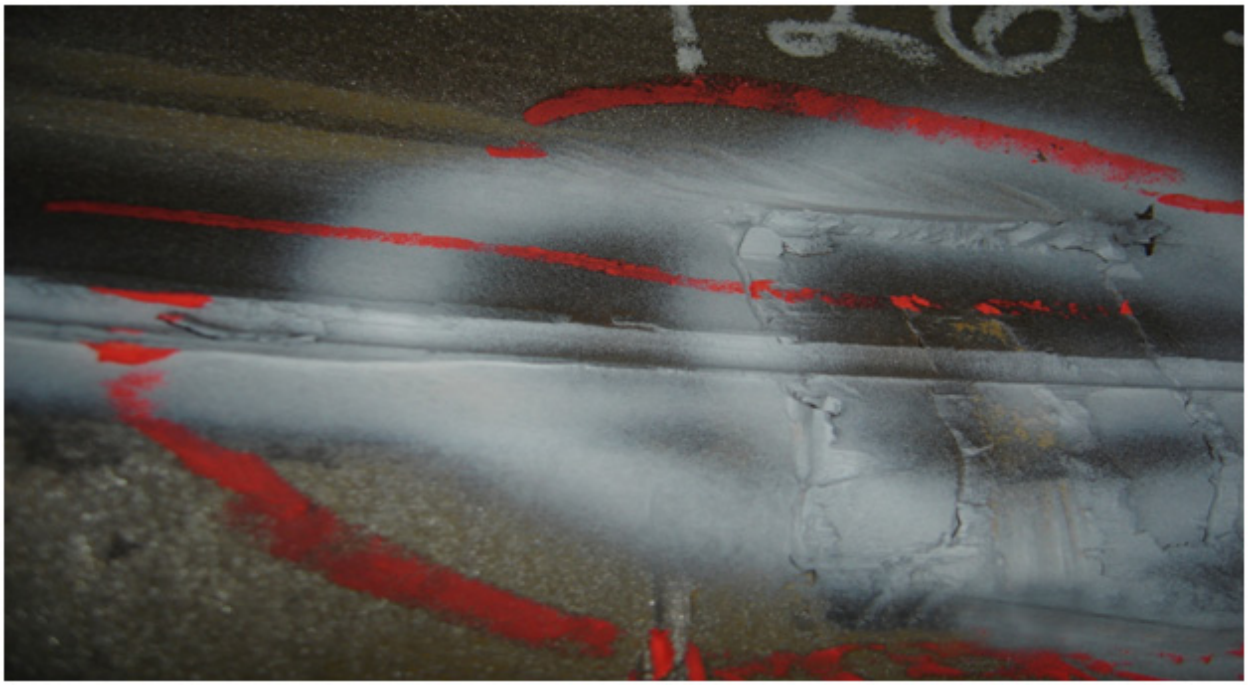

3.5 Gutter Circumference Weld (GCW)

The gutter section is secured to the rim (center band) at the gutter circumference weld (GCW). If a GCW is going to crack, it will more likely occur on a rim then a wheel. This is due to the mounting taper on a rim; more stress is place on the gutter section. For the visual inspection, cracking and excessive corrosion should be looked for. If a rim is mounted to a tire without an anti corrosive agent such as Rimexcel, extreme corrosion and injury to the metal can occur. After time, if not corrected, this may lead to a crack in the GCW (picture 3.51) or o-ring groove.

3.51

3.6 MPI: Gutter Section

For MPI inspection, the LRG, ORG, mounting taper and the GCW should all be shot peened (blasted) and sprayed with a white contrast paint. Any additional areas of concern can also be prepped for examination. Next, a wet particle solution either be applied by either spray can or squeeze bottle to these areas and magnetized with the yoke 360° around the rim. If properly prepared, any metal indications or cracking will be observed. Pictures (3.61 thru 3.65) show the basic presentation seen with the magnetic particle. Some experience is required when evaluating the lock ring groove area. With age the gutter metal will fatigue and indications will develop into cracks. Cracks deep in the groove (Picture 3.65) and on the lip of the groove (Picture 3.62) are equally as dangerous. In picture 3.65, LRG is being pulled away from the rim and is near catastrophic failure. Gutter indications which start in the grove, like picture 3.61, will proceed over the lip to complete into an oval shape crack. These ovals will complete break out of the LRG at the final stage. Once an indication has worked its way over the lip, the gutter section is considered a failure and needs to be replaced.

3.61

Gutter: Superficial indication in the lock-ring groove - OK for service.

3.62

Gutter: Indication has developed over the lip, section has failed and should be replaced. If minor indications stay under the crest of the lip (as seen in the previous picture), the gutter is OK for service.

3.63

Gutter: Oval crack pattern complete in the gutter lip = failed section

3.64

Gutter: Final stage - oval crack pattern breaking apart = failed section

3.65

Gutter: Crack deep within lock ring groove. This is not a minor indication but a long and deep crack. LRG is separating from the applied force. Catastrophic failure is imminent - failed section.

4.0 CENTER BAND

The center band is the middle section of a rim. It is secured to the rim at the forward end at the GCW and at the rear position by the back circumference weld (BCW). This is the standard design for a Rimex rim, while other rim manufacturers will have additional center band material and welds. For inspection purposes, the OD of the center band is located within the tire. Overall, corrosion of the metal is the most common condition found when improper maintenance has been done. The result of this condition will be discussed in the Valve/De-Fuzer section (6.0). Since this is solid piece of metal, we do not MP inspect the center band section. Only the welds and valve holes are MP inspected. Rarely do we see cracks in the center band section. 4.01 is an example of a crack in the center of the CB, this is commonly seen from a valve hole that had been filled.

4.01

RIMEX SUPPLY LTD. 9726 - 186th St, Surrey BC V4N 3N7 | P:: 604.888.0025

5.0 BUTT WELD

The Butt Weld is seen as the horizontal weld which completes/secures the individual section. For Rimex products, the center band butt weld is the only one which is visible. Issues with this weld are uncommon, but occasionally a crack will occur so it should be included in the MP Inspection. An example of such a crack at the junction point between the GCW and Butt Weld of the center band can be seen in picture 5.01 and 5.02.

5.01

5.02

6.0 VALVE / DEFUZER HOLE

All Rimex valve and DeFuzer holes are threaded to NPT standard ANSI / ASME B1.20.1 - 1983 (R 1992). The standard NPT hole sizes are a ½“ for the valve system and a ¾” for the De-Fuzer Valve. This critical area must be properly maintained. To conduct a proper inspection, all valve hardware should be removed. If the brass is damaged within the hole, it must be removed and the threads checked. If no anti corrosive agent is used or improperly administered, the integrity of the metal can be compromised. It is sometimes seen in extreme cold climate where corrosion can eat through at the valve holes. This results in air loss and can create a center band section failure (6.01). In addition, NPT valve holes should never be completely threaded through the centre band (picture 6.02, 6.03) as this may lead to cracking and/or valve sealing issues (picture 6.02 - 6.04).

6.01

6.02

6.03

6.04

7.0 DISC SECTION

The mounting disc is used to bolt the wheel to the hub. Failure to properly mount the disc to the hub is the most common reason for damage. The result is the irregular shaping of the OD of the stud holes. Most of the time, only certain sections of the disc will be affected. In more severe cases, threads from the studs may be embedded into the stud holes (picture 7.01). Replacement of the disc section is usually required.

7.01

8.0 BACK SECTION

Below are the four components of a back section. Each area needs to be reviewed:

- Back Circumference Weld
- Back Tire Bead taper
- Back lip (MES & TSR)
- Back face

8.1 Back Circumference Weld (BCW) - picture 8.11, 8.12

The Back section is secured to the rim (Centreband) at the Back Circumference Weld (BCW). The OD of the BCW is within the tire itself, so it is exposed to the elements within. Corrosion can be an issue, but is not common. Less wear is present on this weld because there is no bead band placed over it, except in the IGLR/DGS design. If any situation is to occur with the BCW, most likely it would be a crack. This occurs more in a wheel than rim, but overall it is rare.

8.11

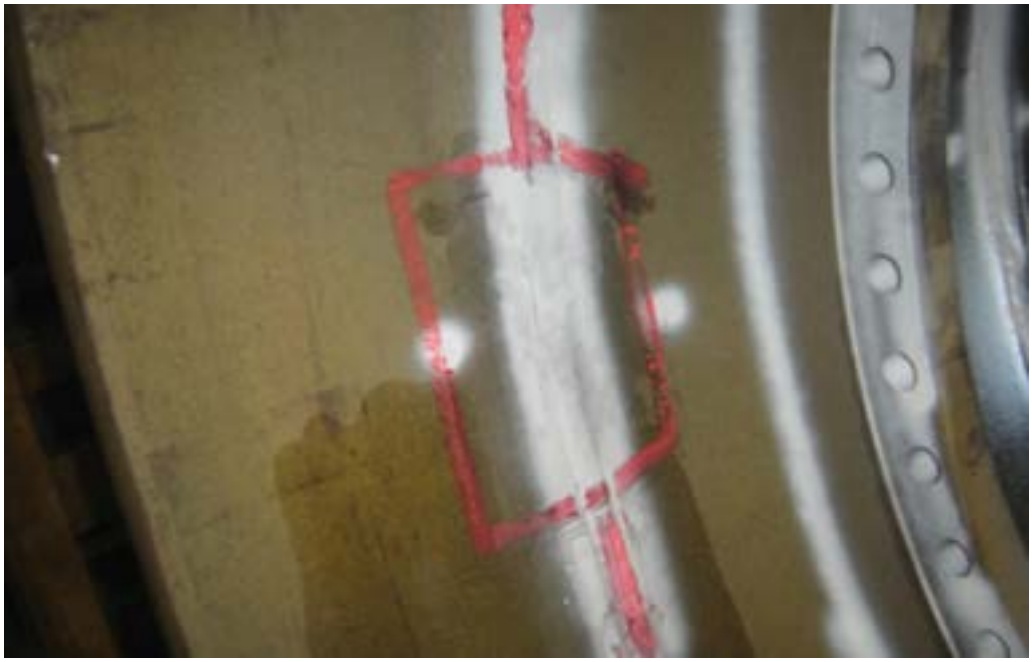

8.12

8.2 Back Section Taper (BT) - Picture 8.21

The back tire bead taper is the area in which the tire bead contacts the rim. If the tire slips on the rim, a 360 wear mark will develop on this section of the back. The tire bead with time will erode the metal and a cause a change in the contact surface. This will eventually decrease the performance of the tire and rim. If a 360° groove around the BT has been observed, the maximum allowance of the change to the surface of the BT is 2 mm. Any measurement taken beyond the 2 mm, at any point within the erosion area, should result in a failed back section.

8.21

8.3 Back Lip (BL) Description - MES & TSR

The Back Lip (BL) is the area where the Side Ring (Flange) secures to the rim. A back section has no bead band to assist in securing the side ring. When inflation occurs, the back lip holds the side ring, while bracing the tire in place. Rimex manufactures two basic types of back sections, the Machine Extreme Service (MES) (picture 8.31) and Taper Secure Radial (TSR) (picture 8.331). The MES is similar to a standard OEM back sections, except with more material, while the TSR revolutionized the industry with its 360° tapered design.

8.31

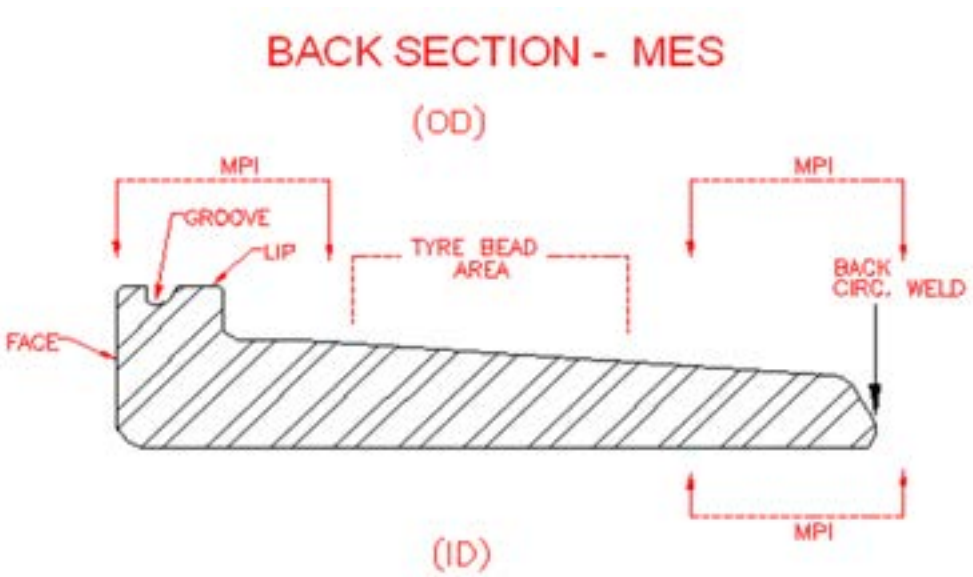

8.32 MES Back Section - Picture 8.321 thru 8.324

The MES/Standard design has the flange and back lip securing at approximately a ninety degree angle. This design applies a significant amount of force to the lip and flange. Over time, the back lip will compress and fold downward. In addition, under inflation or material within the BL and flange can create extreme galling (metal to metal wear). This wear will affect the performance of the rim to secure the tire. When visually inspecting the rim, one needs to assess the amount of wear and compression to the back lip. It is critical to understand that cracks unseen to visual inspection, may be present. If the compression or galling within the lip itself is greater than 2 mm, the back section should be replaced (8.321 + 8.322).

8.321

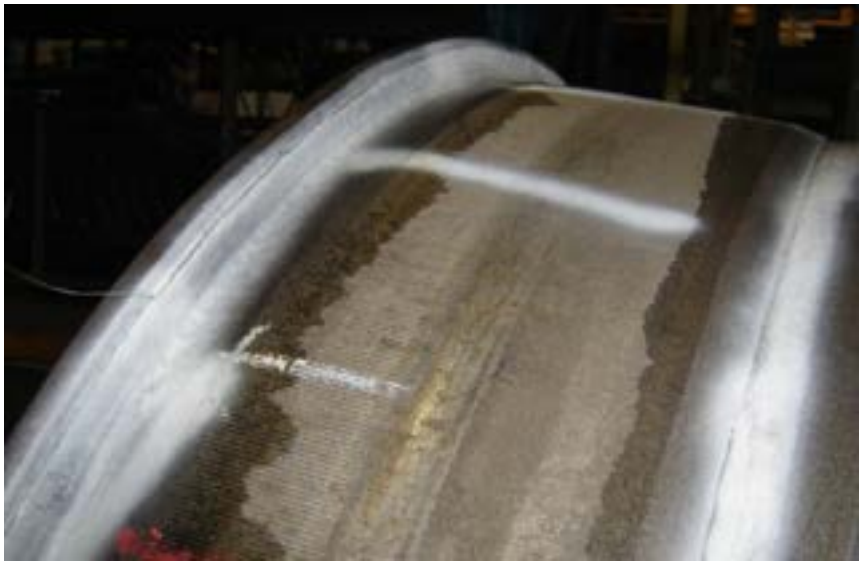

8.322

8.323 + 8.324 are examples of a failed back lip section from cracking, only visible by MPI inspection.

8.323

8.324

8.331

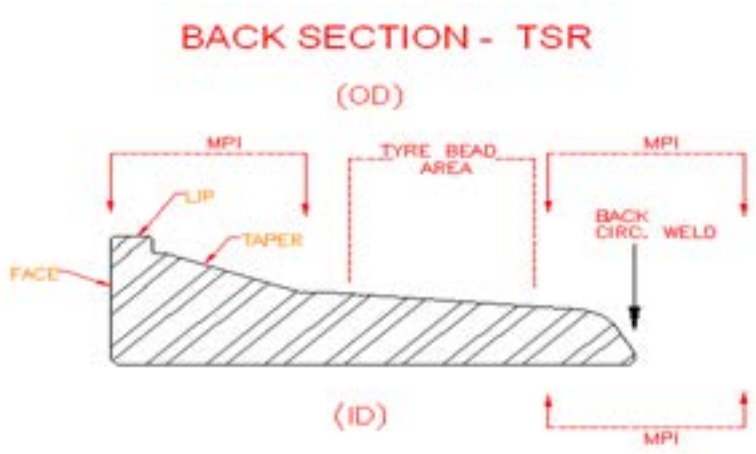

8.33 TSR Back Section

The TSR back section has a fully machined taper thru to the lip. The TSR flange, with its fully machined taper, matches perfectly with the TSR back and bead band. With this design and increase material over the MES, the TSR provides a superior rim system. Overall, the tire is better secured within the rim and the stresses placed on the parts are evenly spread out. As a result, the wear presented is minimized. After years of service, a properly maintained TRS back may show no signs of wear.

When visually inspecting a TSR back, the taper wear needs to be examined. If galling or mechanical damaged to the taper exceeds 2mm, the section is subject to failure. If the wear to the taper is 360 around, with 1.5 mm or greater depth, the section has failed and needs to be replaced. In addition, the flange should never touch the lip of a TSR Back. Therefore, any mechanical wear close to the lip need to be carefully examined. Finally, after 5 or more years of service (57”/63”), the roundness of the back section may be in question. The inspector should take a cross measurement of the back section ID. If the measurements show a difference of +/ - .075mm, the back section should be replaced.

8.4 Back Section Face

The face is the outer most area of the back section. The most common damage to this section comes from mechanical damage. If damage has occurred, the inspector needs to evaluate the integrity and roundness of the section. If the structural integrity of the back is in question or its circumference, the section should be replaced.

9.0 PARTS: SIDE RING (SR) / BEAD BAND (BB) / LOCK RING (LR)

Components parts should be visually inspection and contact areas cleaned during each tire change. Periodically, parts should be set aside for a complete inspection. Parts which pass a complete visual inspection, should be blasted (Shot peened), and the critical areas MP inspected. After passing inspection, parts should be painted, and returned to service. We will review the inspection steps for each part below. Please note that parts can take excessive amount of time and energy to conduct a Magnetic particle inspection. The ability to conduct a proper visual inspection with a side ring OD gauge and caliper can reveal failure points early in the process.

9.1 SIDE RING (Flange) (SR)

9.11

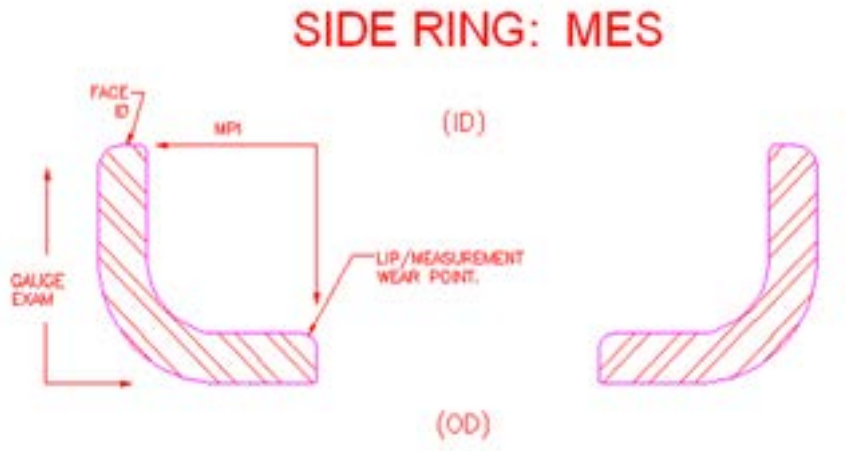

9.12

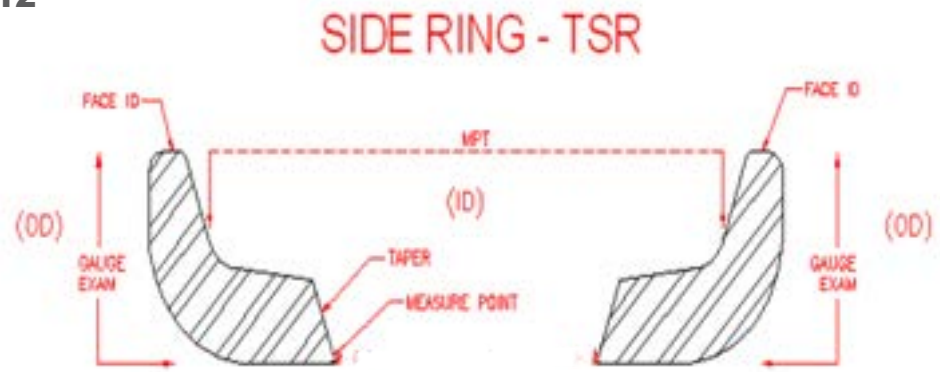

Each Rim/Wheel assembly consists of 2 side rings (picture 9.11, 9.12). The purpose of the side ring is to hold the tire bead in place. Once inflation occurs, the side wall of the tire will force outward against the side rings, thus sealing and securing the tire. When inspecting a side ring, the most important areas to evaluate is the level of wear from the metal to metal contact between the SR and the Bead Band/Back Lip. Once the depth of the material in the inner lip has eroded to a level of 2 mm, the SR must be removed from service. On the MES design, this inner lip will be the critical area to inspect; a digital caliper can be used to measure the change in wear.

With the TSR design (picture 9.12), metal to metal wear is spread across the tapers and thus will not show in the same presentation as the MES. First, the inspector needs to examine for any mechanical wear or galling present into the taper. Any damage to the taper which exceeds 2 mm needs to be replaced. In addition to the visual inspection, a cross measurement will need to be taken of the inner lip from the OD side of the taper. An allowance of only +/- .075 mm is allowed before the SR must be replaced.

Next is the level of wear to the OD of the SR where contact is made with the tire. The outer diameter (OD) of the SR contacts the tire and holds its bead while inflated (picture 9.13). With use, the tire will wear a 360 mark along the OD of the side ring (picture 9.14, 9.15). With time the metal will erode and loose its ability to secure the tire. The maximum allotment for erosion to the OD of the side ring is 2 mm.

Furthermore, any mechanical damage to a side ring which places the integrity or roundness in questions should be replaced.

9.13

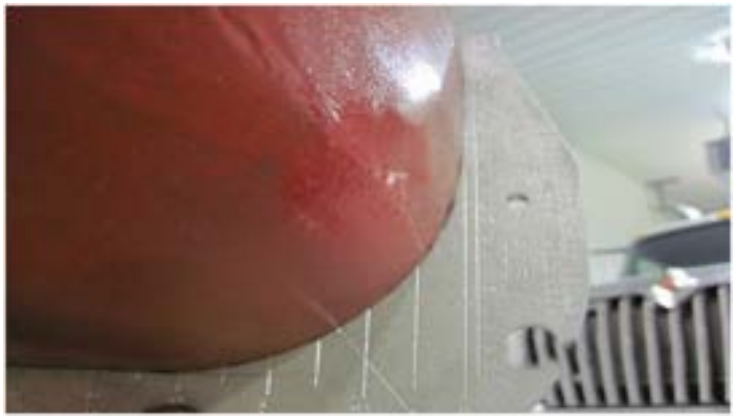

9.14

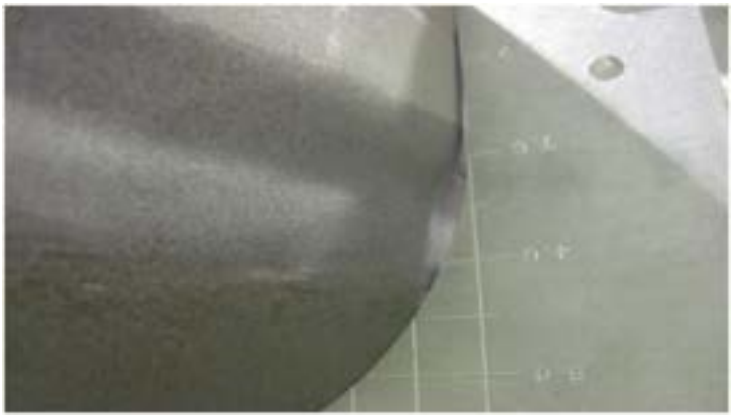

9.15

MPI SIDE RING (Recommended for 49” to 63”)

If the side ring passed the visual inspection, a MP inspection of the ID should be conducted. This step will insure no cracks are present. After blasting (shot peened), spray the contrast paint to the ID side only. Allow to dry, then magnetize the metal while applying the particle solution. Any cracks present will be observed (picture 9.16). If no cracks are found, side ring should be painted and returned to service.

9.16

9.2 BEAD SEAT BAND (BB) - Picture 9.21 thru 9.25

9.21

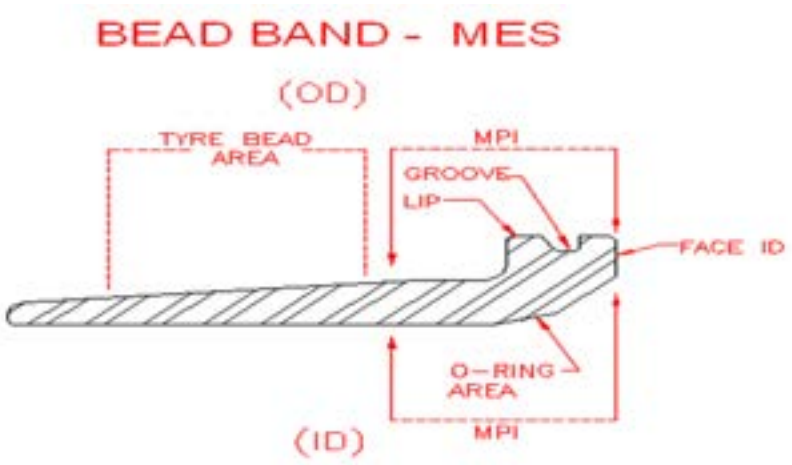

9.22

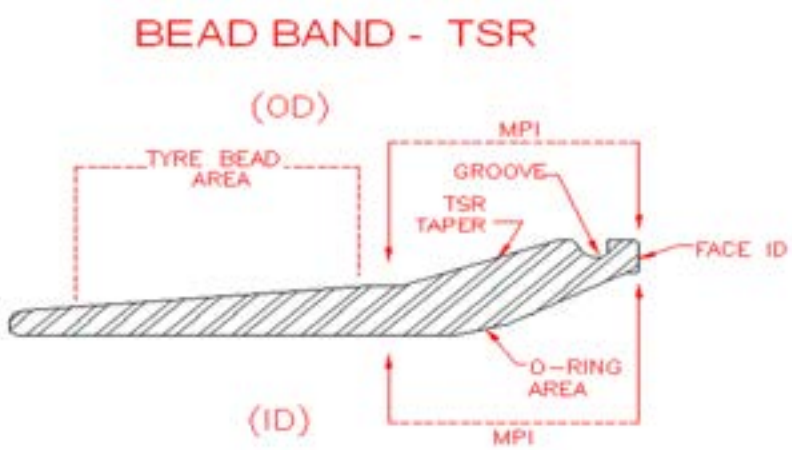

For the basic rim design, the tire bead sits on the OD of the bead band and the back section taper. Basically, the bead band acts as a removable back section. When inflated the tire will force the side ring into the lip of the BB and secure it against the lock ring. For visual inspection, the two areas which are critical for review are: the BB taper, where the tire bead rests and at the location of the o-ring. Any excessive wear (2 mm), cracks, mechanical damage or corrosion to the BB would result in a failure. For MPI inspection, the Lip (Taper), Face and ID to o-ring area need to be contrast sprayed and magnetized. Any cracking found would result in an immediate failure. A bead band which has passed inspection can be painted and returned to service.

9.23

9.24

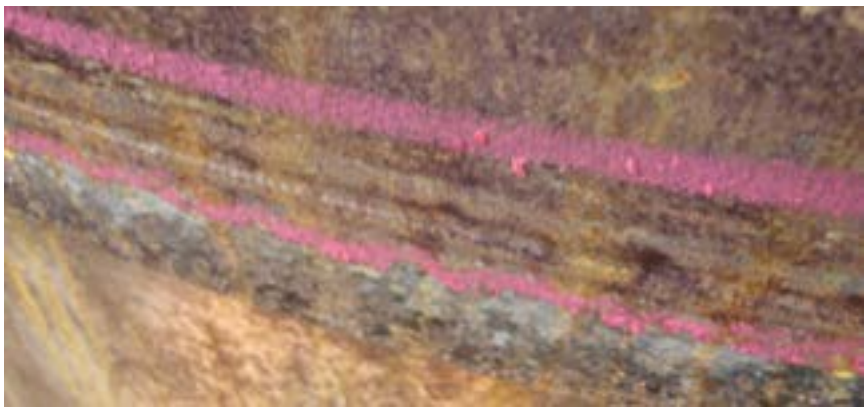

9.25

9.3 Lock Ring (LR) - Picture 9.32 thru 9.35

9.31

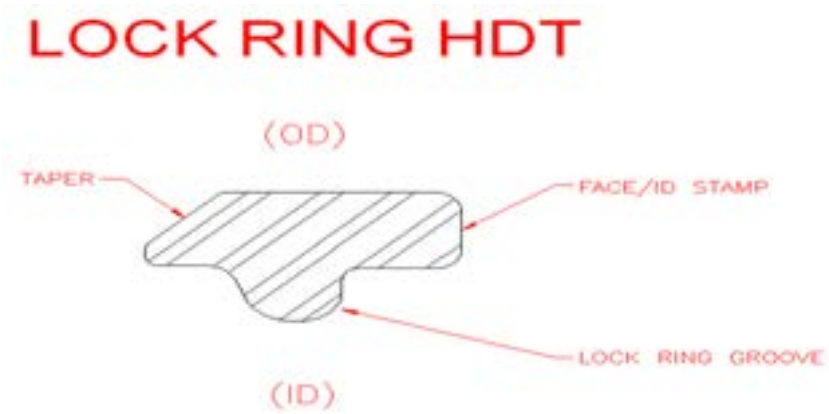

The Lock Ring is the final part added to secure the Rim/Wheel assembly, holding the assembly together. To secure all the components and minimize the friction between parts of the tire assembly, the lock ring must be elastic to expand then contract into place within the LRG of the gutter section. A new lock ring in will have an overlap of 3 to 4 inches (57” & 63”) (picture 9.32) between its tips before mounting. With time, the lock ring will lose its ability to hold its original form. When inspecting a lock ring, the distance between the ends of it and the overall condition of the taper area must be reviewed. When the LR is not installed, the ends of the tips should overlap (picture 9.32). Once a lock ring loses its ability to bounce back to its origin form, distance between the tips will widen and the LR will no longer be usable (picture 9.33).

9.32

9.33

9.34

9.35

10.0 REPAIR PROCESS

See flow chart for process

10.01

Example of a two sections failed inspection.

10.1 RIMEX REPAIR FLOW CHART

1. ARRIVAL OF PRODUCT

A. UNLOAD PRODUCT AND PLACE IN DESIGNATED AREA
B. RECEIVE ALL DOCUMENTS & ASSIGN RRD/ CO/JOB NUMBERS
C. WRITE RRD AND JOB/CO NUMBERS ON PRODUCT
D. TAKE DIGITAL PHOTOS OF PRODUCT
E. NOTIFY OR ISSUE WORK ORDERS FOR SHOT PEENIING

2. SHOT PEENING

A. SHOT PEEN PRODUCT TO REMOVE ALL PAINT AND OTHER SUBSTANCES
B. AFTER COMPLETION REWRITE RRD & CO/JOB NUMBER ON PRODUCTS
C. STORE PRODUCT IN DESIGNATED AREA- (DRY AND COVERED)

3. CONTRAST SPRAY PAINTING

A. ALL CRITICAL AREAS OF THE PRODUCT WILL BE SPRAYED WITH CONTRAST PAINT
THESES AREAS ARE AS FOLLOWS:
GUTTER- (LOCKRING GROOVE, O-RING GROOVE)
BOTH OD & ID CIRCUMFERENCE WELDS-
(GUTTER CIRCUMFERENCE WELD, CENTERBAND CW & BACK CW)
BACK SECTION-(BACK LIP)
DISC SECTION-(MIDDLE DISC AREA)
VALVE HOLE AREA
ID TAG/ MANUAFACTURE IDENTICATION MARKS
B. ANY NON-CONFORMING AREAS WILL BE CIRCLED OR LINED. IF THE SECTION IS A CLEAR FAILURE, SPRAYING OF THE AREA/PART MAY BE DISCONTINUED.
C. AFTER COMPLETION OF SPRAYING, PRODUCT WILL BE RETURNED TO DESIGNATED AREA FOR MAGETIC PARTICLE INSPECTION-(DRY& COVERED)

4. MAGNETIC PARTICLE INSPECTION

A. ASSIGN A DASH NUMBER(-1) TO EACH BASE
B. RETRIEVE ALL PERTINENT INFORMATION FROM BASE
C. WITH INFORMATION, FILL OUT INSPECTION FORM
D. PULL PLUGS
E. PREPARE WET PARITICLE SOLUTION
F. START INSPECTION OF BASE
G. DOCUMENT FINDINGS ON INSPECTION FORM
H. ALL NON-CONFORMING AREAS WILL BE MARKED WITH RED CHALK
I. DIGITAL PHOTOS OF BASE AND NON-CONFORMING ITEMS

NON-CONFORMING ITEMS

IF ONLY ONE SECTION OF THE BASE HAS FAILED, IT IS SENT TO THE PRODUCTION SHOP FOR REPAIR.

IF THERE ARE MORE THAN ONE NON-CONFORMING SECTION, USUALLY, THE BASE IS DEEMED NOT WORTH REPAIR AND SCRAPPED **(Picture 10.01)**

PASSED INSPECTION

PAINT ONLY

REBLAST/ ID TAG PRODUCED/ PAINT

5. REPAIR FACILITY

BURN TABLE/ MILL
RE/RE PART OR CIRCUMFERENCE WELD
ID TAG PRODUCED/ SHOT PEENING/ PAINT
QC INSPECTION

SCRAP ON-SITE

IF CUSTOMER REQUESTS, FAILED ITEMS WILL BE RETURNED

6. PRODUCT RETURNED TO CUSTOMER

RIMEX SUPPLY LTD. 9726 - 186th St, Surrey BC V4N 3N7 | P:: 604.888.0025

11.0 CONCLUSION

The purpose of this guide is to assist the mine site and or off site inspectors in having a better understanding of MPI interpretation and wear requirements concerning the evaluation of Rim/Wheel assemblies. Safety is the top concern and this information should make the processes of evaluating easier. **Our basic guidelines can be noted in the below summary.**

Rimex Supply Ltd.
9726 - 186th Street
Surrey, British Columbia
CANADA V4N 3N7
Phone: (604) 888-0025
Fax: (604) 888-0020

RIMEX
Building better wheels

RIMEX
INSPECTION GUIDELINE SUMMARY

Visual, Magnetic Particle & Circumferential Roundness inspection
(Conforms to AS 4457.1-2006)

Test specification:	AS1171-2005	**Surface preparation:**	Grit blasted – class 2.5
Magnetising method:	Magnetic flow technique	**Equipment:**	A.C. Yoke
Media/viewing condition	Black magnetic ink on a white background.	**Material to be tested:**	See Model No. above
Test materials:	**ELY-** Parker B-300, White contrast paint	**MAXIFLUX-** Magnalux – Black magnetic particle -	Wet application Kerosene based
Item demagnetised:	Not req.	**Check roundness of rim:**	Round within .075mm

SECTION	AREA	VISL	MPI	G	CRITERIA
					AREA SHOULD HAVE NONE OF THE FOLLOWING
GUTTER					
	FACE	X			CRACKED OR MECH. DAMAGE
	LRG	X	X	X	CRACKED, + 1.5mm WEAR, MECH. DAMAGE
	ORG	X	X	X	CRACKED, + 1.5mm WEAR, MECH. DAMAGE
	MT	X	X		TAPER DAMAGE, CRACKED
	GCW	X	X		CRACKED, CORROSION
	VP	X	X		CRACKED, BENDED OR REMOVED
CB					
	SURFACE	X			CRACKED, EXCESSIVE CORROSION
	CBCW1	X	X		CRACKED, CORROSION
	CBCW2	X	X		CRACKED, CORROSION
	VH/DFH	X	X		BROKEN BRASS, BAD THREADS, CRACKED
DISC	ID WELDS	X	X		CRACKED
	STUD HOLES	X	X		CRACKED, OVAL STUD HOLES
BACK	BCW	X	X		CRACKED, CORROSION
	BT	X			2mm OF MATERIAL WEAR PRESENT
	BL	X	X		CRACKED, COMPRESSION
	FACE	X			CRACKED, MECH. DAMAGE
PARTS	SIDE RING	X	49-63	X	CRACKED, WEAR 2mm, OOR
	BEAD BAND	X	49-63	X	CRACKED, WEAR 2mm, OOR
	LOCK RING	X			MECHANICAL DAMAGE, CRACKED, ENDS DO NOT TOUCH
ROUND				M	IF IN QUESTION OR 6YRS OLD
	GUTTER	X		X	TOLERANCES +/-.075mm
	DISC	X		X	TOLERANCES +/-.075mm
	BACK	X		X	TOLERANCES +/-.075mm

1. MPI areas include: All welds / Valve hole / Lock ring & O'ring groove / Back lip / Mounting disc weld & disc surface.
2. All wheels/rims s/blasted to Class 2.5 & viewed with the Gutterband facing the inspector with the Valve hole at the 12 o'clock position.
3. Abbreviations: **CB**=Centre band / **LRG**=Lock ring groove / **ORG**=O'ring groove / **VH**=Valve hole / **BL**=Back lip / **G** = Gauge / **VISL**= Visual inspect / **CW**=Circumferential weld / **BW**=Butt weld / **MD**=Mounting Taper / **W**=Weld / **M**= Measure

Rimex Supply Ltd.
9726 - 186th Street
Surrey, British Columbia
CANADA V4N 3N7
Phone: (604) 888-0025
Fax: (604) 888-0020

RIMEX
Building better wheels

Ref:

RIMEX INSPECTION REPORT

Visual, Magnetic Particle & Circumferential Roundness inspection

(Conforms to AS 4457.1-2006)

Client		**Rim / Wheel Size**		**Serial No.**	
Contact		**Tire Size**		**Hours**	
Client PO No.		**Manufacturer**		**Inspector**	**Tim**
RRD No.		**Manufacture date**		**Date**	
Model No.		**Machine**		**Signature**	*Tim Beardall*

SECTION	AREA	LOC	DISCONTINUITY	ACTION REQUIRED
GUTTER				
	FACE			
	LRG			
	ORG			
	MT			
	GCW			
	VP			
CB				
	SURFACE			
	CBCW1			
	CBCW2			
	VH/DFH			
DISC				
	ID WELDS			
	STUD HOLES			
BACK				
	BCW			
	BT			
	BL			
	FACE			
PARTS				
	SIDE RING			
	BEAD BAND			
	LOCK RING			
ROUND				
	GUTTER			
	DISC			
	BACK			

Notes:

Final Disposition: **Est. Total cost: $0.00**

Test specification:	AS1171-2005	**Surface preparation:**	Grit blasted – class 2.5
Magnetising method:	Magnetic flow technique	**Equipment:**	A.C. Yoke
Media/viewing condition	Black magnetic ink on a white background.	**Material to be tested:**	See Model No. above
Test materials:	**ELY-** Parker B-300, White contrast paint	**MAXIFLUX-** Magnalux – Black magnetic particle -	Wet application Kerosene based
Item demagnetised:	Not req.	**Check roundness of rim:**	Round within .075mm

1. MPI areas include: All welds / Valve hole / Lock ring & O'ring groove / Back lip / Mounting disc weld & disc surface.
2. All wheels/rims s/blasted to Class 2.5 & viewed with the Gutterband facing the inspector with the Valve hole at the 12 o'clock position.
3. Abbreviations: **CB**=Centre band / **LRG**=Lock ring groove / **ORG**=O'ring groove / **VH**=Valve hole / **BT**= Back Taper/**BL**=Back lip / **G** = Gauge / **VISL**= Visual inspect / **CW**=Circumferential weld / **BW**=Butt weld / **MT**=Mounting Taper / **W**=Weld / **M**= Measure